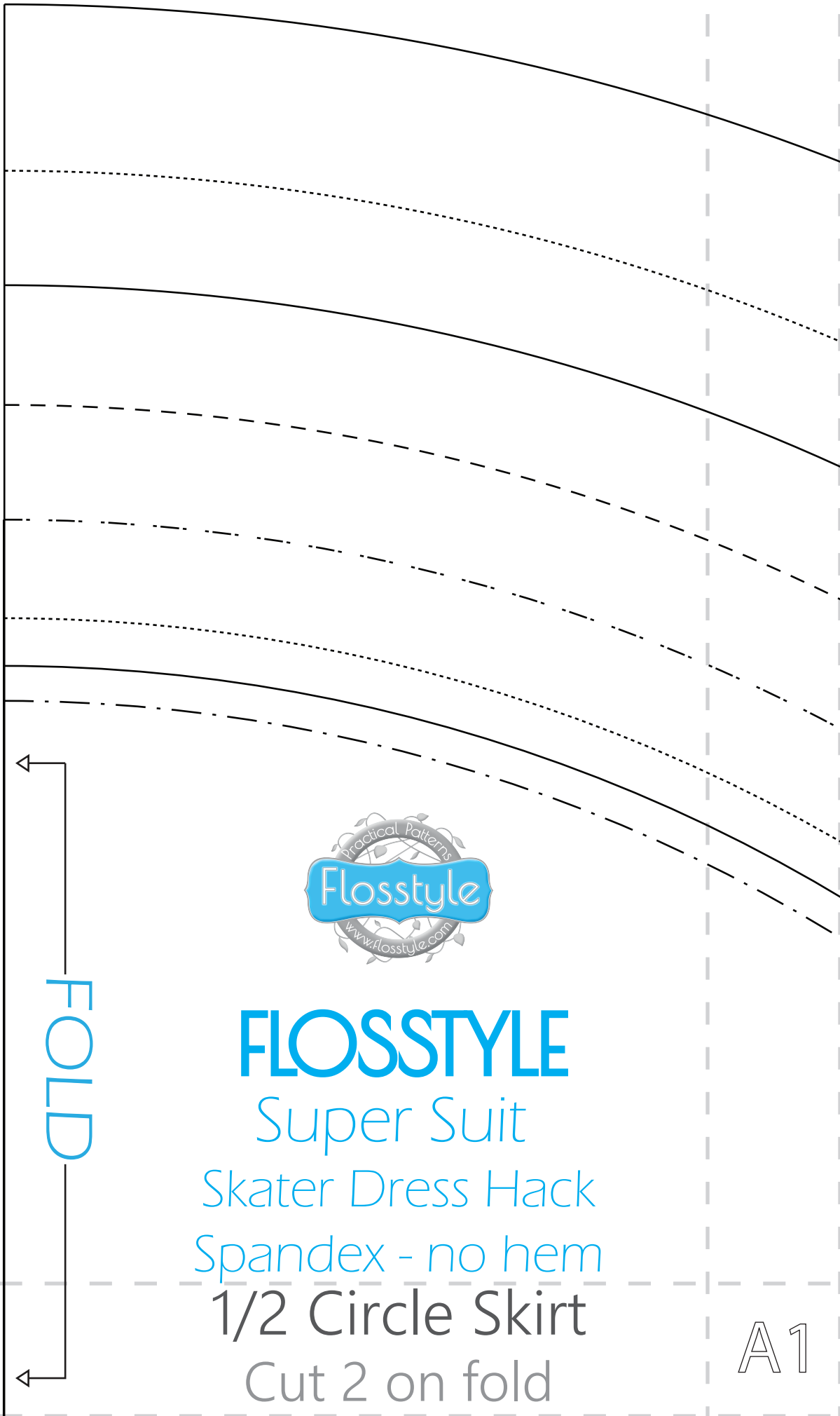

FLOSSTYLE

Super Suit

Skater Dress Hack

Spandex - no hem

1/2 Circle Skirt

Cut 2 on fold

A1

2

18m

1

0

00

000

0000

00000

00000

0000

000

00

00

A1

B1

Flosstyle

www.flosstyle.com

Super Suit Skater Dress Hack

© Flosstyle Patterns 2017

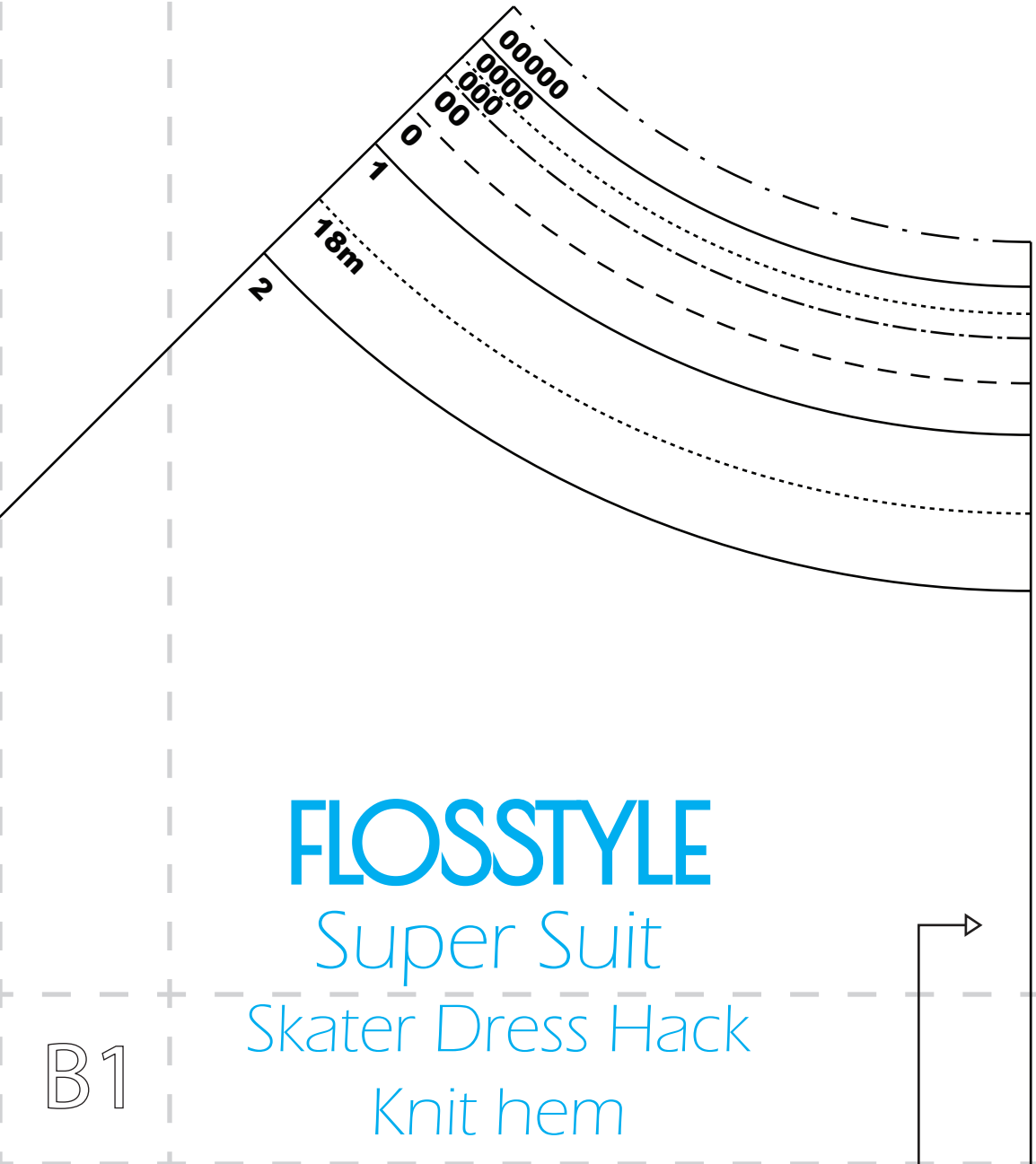

FLOSSTYLE

Super Suit

Skater Dress Hack

Knit hem

B1

C1

1/2 Circle Skirt

Cut 2 on fold

A1

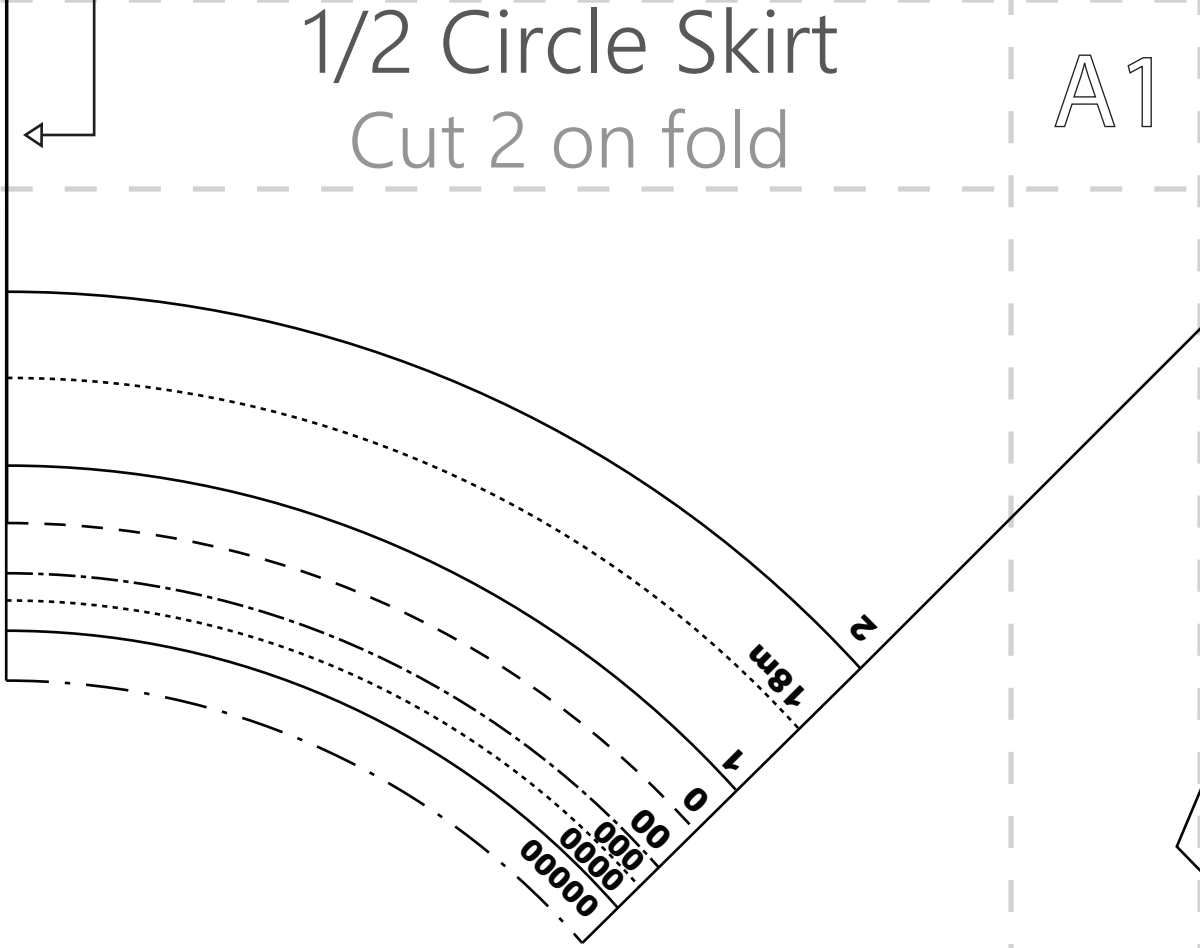

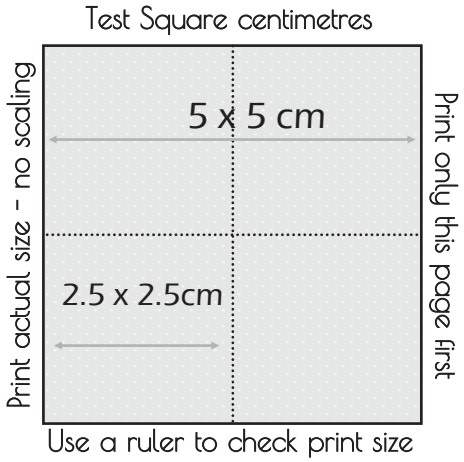

A2

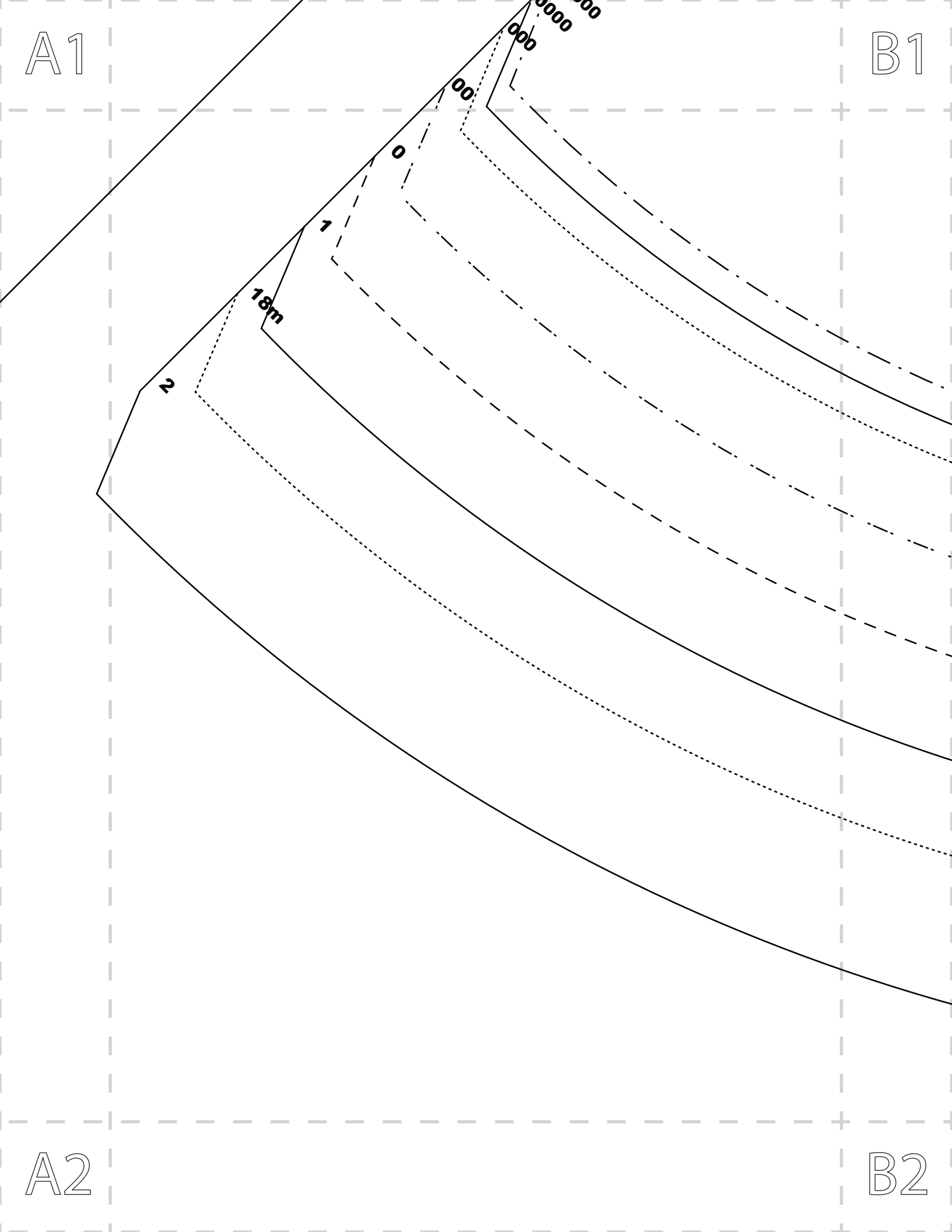
A1
B1
A2
B2
0000
000
00
0
1
18m
2

B1

C1

Skater Dress Hack

Knit hem

1/2 Circle Skirt

Cut 2 on fold

FOLD

B2

C2